9072-11

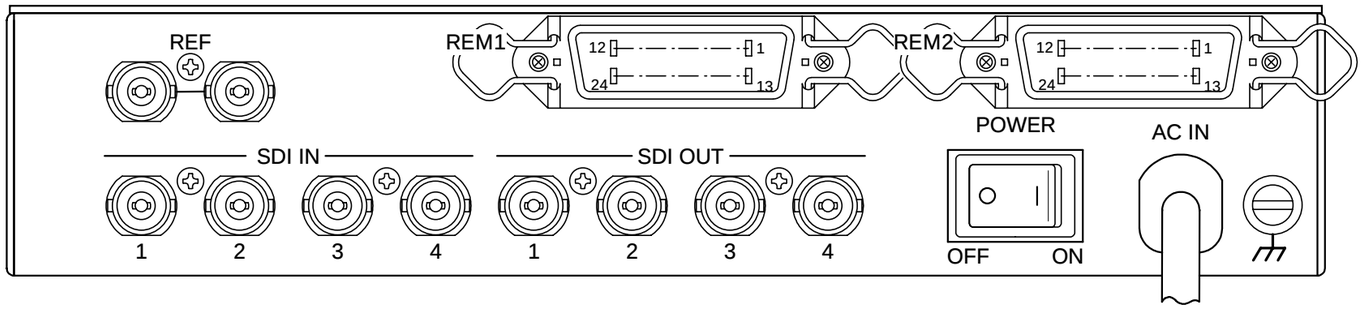

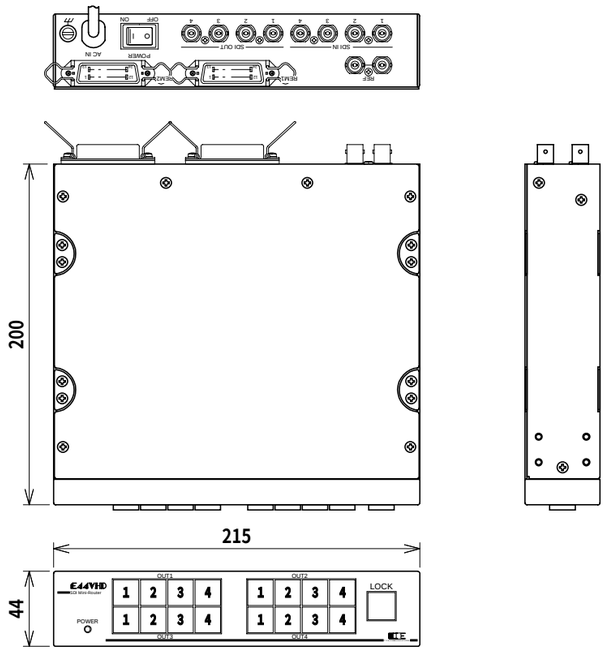

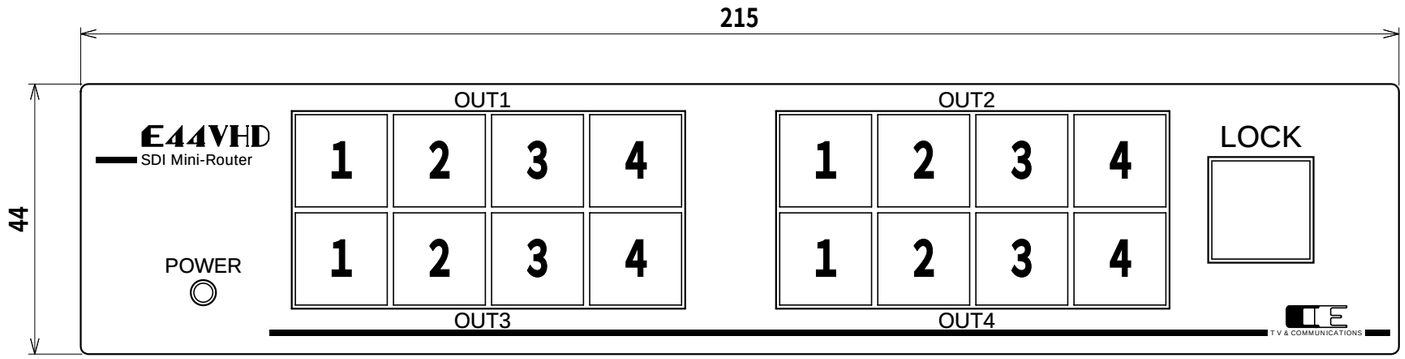

STAMP	DATE	REVISION	SIGN.
5 ×			
4 ×			
3 ×			
2 ×			
1 ×			

TOLERANCE

L ≦ 4	±0.1
4 ＜ L ≦ 16	±0.2
16 ＜ L ≦ 63	±0.3
63 ＜ L ≦ 250	±0.4
250 ＜ L	±0.6

UNIT mm　ANGLE 3rd

SCALE ×

ISSUED 2008.07.28

REVISED

CHECKED by 齊藤

DRAWN by 野中

APPROVED by

PLANNED by 諸岡

MATERIAL JFE－CC－JN t＝1.2

FINISH (COLOR) A級塗装：2.5Y5/1半ツヤメタリック中目

DESCRIPTION E44VHD (SDI Mini-Router)

外観図

MODEL No. 23－5966

PART No. 25－2192

SHEET ／

TV&COMMUNICATIONS