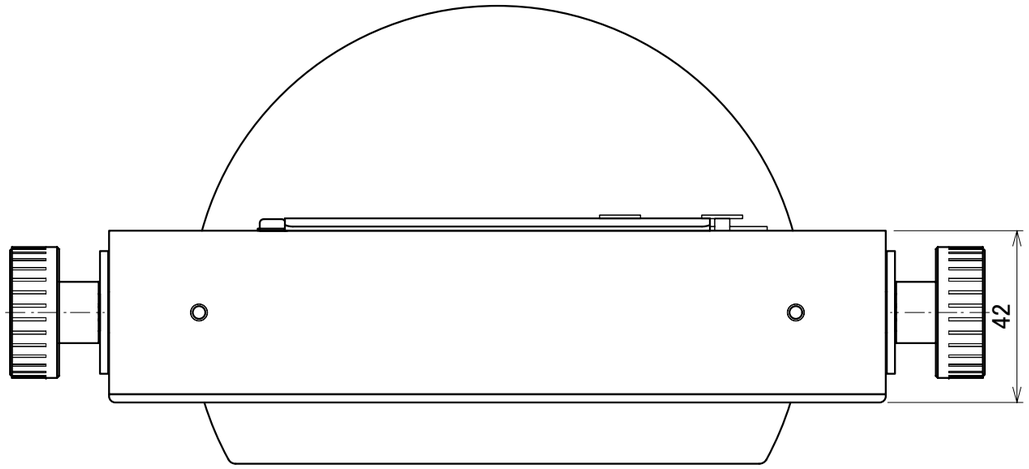
42

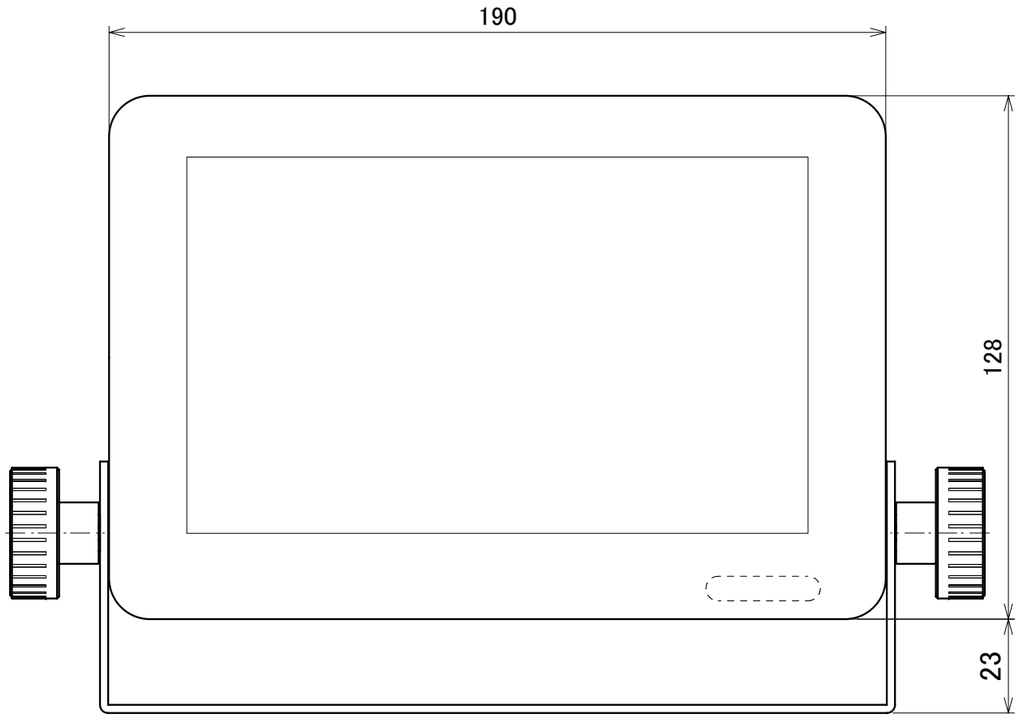
190
128
23

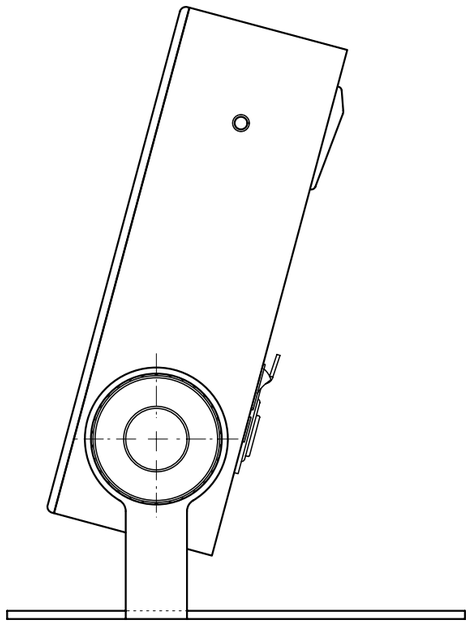

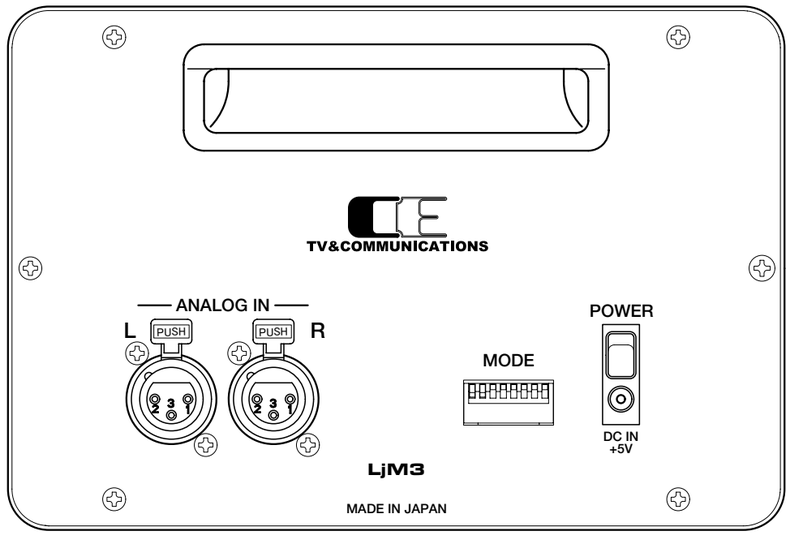
TV&COMMUNICATIONS
ANALOG IN
L
PUSH
PUSH
R
MODE
POWER
DC IN
+5V
LjM3
MADE IN JAPAN